AUTOMAX



MAX UP YOUR CAR

ADDITIVES & SYSTEM CLEANERS

Zertifiziert durch TÜV THÜRINGEN

TÜV NORD

made in GERMANY

made in GERMANY

AUTOMAX

MAX UP YOUR CAR

HIGH PERFORMANCE ADDITIVES



AUTOMAX product of GAT

AUTOMAX is the brand of the international company group GAT (Gesellschaft für Kraftstoff- und Automobiltechnologie mbH & Co. KG), which was specially developed for the consumer market in 2014. AUTOMAX stands for high-quality products that have been specially designed for distribution via retail channels such as petrol stations and e-commerce. The AUTOMAX processes and products are TÜV-certified and tested by recognized laboratories and institutions. The product range with the core competence of cleaning, care and maintenance is constantly being expanded and adapted to the changes in the market. AUTOMAX has established itself as a global brand and stands for outstanding additives and system cleaners, "Made in Germany".





Benefits at a glance:

- Products certified by TÜV Nord "Made in Germany"
- In-house laboratory with own R&D department
- Meeting OEM standards
- Products references: TÜV Thüringen "certified effectiveness" and University of Armed Forces Munich
- Unique marketing concept

AUTOMAX

www.automax-germany.de



ADDITIVES & SYSTEM CLEANERS

Made in Germany

CONTENTS

OIL SYSTEM

Engine Flush	6
Cera Max Protect	6
Nano Engine Protect & Seal	7
Oil Booster	7
Oil Anti Smoke	7
Engine Oil Stop Leak	8
Hydraulic Lifter Care & Protect	8
Engine Care & Protect	8

FUEL SYSTEM

Fuel System Cleaner PLUS – *TÜV approved*	10
Fuel Clean	11
Fuel System Cleaner HYBRID	11
Fuel Air Intake Cleaner	11
GDI Injector Cleaner	12
Valve & Injection Cleaner	12
Petrol Applicator Spray	12
Octane Booster	13
Octane Booster MAX	13

DIESEL SYSTEM

Diesel System Cleaner PLUS – *TÜV approved*	14
Diesel Clean	14
Diesel Air Intake Cleaner	15
Diesel Anti Smoke	15
Diesel Winter Care	15
Cetane Booster	16
Diesel Anti Bacteria	16
Diesel Applicator Spray	16
DPF Cleaner	17
DPF & Catalyst Cleaning Foam	17
DPF Cleaning Liquid	17
DPF Air Jet Fluid	18
DPF Starter-Kit	18
CAT Clean	18

LPG SYSTEM

LPG Fuel System Cleaner	20
LPG System Clean & Care	20
LPG Valve Guard	21

COOLING SYSTEM

Radiator Leak Stop	22
Radiator Flush	22
Radiator Cleaner	23
Radiator Conditioner	23
Radiator Oil Cleaner Set C1+C2	23

AIR CONDITION

AirCon Cleaner	24
Fresh´n AIR Fluid	24
AirCon Refresher Lemon	25

CAR CARE

Windscreen Antifreeze -30°/-60°	26
Anti Hologram Polish	26
Easy Guard Sealant	27
High Gloss Sealant	27
Top Coat Sealant	27

NANO SEALANT

Nano Car Glass Sealant Set	28

GEAR BOX & POWERSTEERING

Automatic Transmission Clean	30
Automatic Transmission Care & Protect	30
Power Steering Care & Protect	31

SERVICE PRODUCTS

Brake Cleaner	32
Throttle Body Cleaner	32
Rust Remover MoS_2	33
Nano Lube	33
Penetrate Spray	33
Chain Lube EXTREME	34
Electrical Contact Cleaner	34
Silicone Spray	34
Starting Spray	35
Injector Dismantling Aid	35
	35



OIL SYSTEM

ENGINE FLUSH 250ml – Art. No. 62755

- dissolves operationally caused contamination and resin formations in the complete oil system
- eliminates aggressive residues from the combustion process
- contains highly effective protecting additives
- considerably improved and stable compression
- fuel and oil consumption as well as wear and tear are reduced
- less harmful exhaust emissions protect the environment and extend the life span of the catalytic converter

REACTION TIME
approx. 15-20 min.

APPLICATION FIELD
for use in all diesel and gasoline engines

CONSUMPTION
product sufficient for 5L

APPLICATION INTERVAL
before every oil change

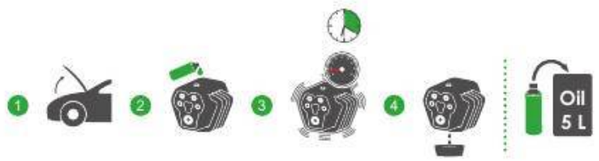

CERA MAX PROTECT – Engine oil additive 250ml – Art. No. 62757



- high performance additive
- reduced wear and tear due to the creation of a stable wear protection layer
- wear and tear resistant ceramic
- improved wear protection
- compatible with all mineral and synthetic engine oils
- less running noise and reduced exhaust gas emissions
- increased engine performance and optimized fuel consumption

REACTION TIME
works during operation

APPLICATION FIELD
for use in all diesel and gasoline engines

CONSUMPTION
product sufficient for 5L

APPLICATION INTERVAL
with every oil change



NANO ENGINE PROTECT & SEAL 250ml – Art. No. 62949



- forms a highly efficient Nano anti-friction barrier in the oil
- is recommended for use with turbos, catalytic converters and particulate filter
- protects all the internal surfaces of engine and equipment e. g. oil systems, manual gearboxes, differentials, transfer boxes
- keeps the o-rings and shaft seals soft and supple
- reduces wear and tear
- protects against corrosion
- prevents from deposits in the oil and lubrication system
- combats harmful engine acids, increases reliability of operation and prolonged life span of all components, decreased oil consumption and emissions, improved motor performance

REACTION TIME
works during operation

APPLICATION FIELD
for use in all diesel and gasoline engine

CONSUMPTION
product sufficient for 5L

APPLICATION INTERVAL
with every oil change or on demand



OIL BOOSTER 250ml – Art. No. 62780

- highly effective additive package for increased wear and tear protection properties of all types of engine oils
- reduces wear and tear
- protects against corrosion
- prevents from deposits in the oil and lubrication system
- combats harmful engine acids
- increases reliability of operation and prolonged life span of all components
- decreased oil consumption and emissions
- improved motor performance

REACTION TIME
works during operation

APPLICATION FIELD
for use in all diesel and gasoline engines

CONSUMPTION
product sufficient for 5L

APPLICATION INTERVAL
with every oil change



OIL ANTI SMOKE 250ml – Art. No. 62926



- ensures optimum lubrication of all moving parts and helps prevent oxidation of the oil
- the high viscosity prevents oil from entering the combustion chamber
- providing a clean and powerful combustion with minimal smoking and soot build-up

REACTION TIME
works during operation

APPLICATION FIELD
for use in all diesel and gasoline engines

CONSUMPTION
product sufficient for 5L

APPLICATION INTERVAL
with every oil change or on demand



ENGINE OIL STOP LEAK 250ml – Art. No. 62698



- contains a highly effective additive package to stop loss of engine oil caused by leakage
- helps to regenerate engine gaskets and keeps them soft and supple
- reduction of oil loss
- improved reliability of operation
- increased engine performance
- less wear and tear

REACTION TIME
works during operation

APPLICATION FIELD
for use in all diesel and gasoline engines

CONSUMPTION
product sufficient for 5L

APPLICATION INTERVAL
on demand



HYDRAULIC LIFTER CARE & PROTECT 250ml – Art. No. 62779



- contains a high performance package of effective additives
- improved high pressure properties as well as wear and tear protection
- for all types of engine oils
- disturbing rattle sounds will be eliminated
- reduction of wear and tear
- optimized lubrication

REACTION TIME
works during operation

APPLICATION FIELD
for use in all diesel and gasoline engines

CONSUMPTION
product sufficient for 5L

APPLICATION INTERVAL
with every oil change or on demand



ENGINE CARE & PROTECT 250ml – Art. No. 62756



- highly effective additive package
- for increased wear and tear protection properties of all types of engine oils
- optimal lubrication guarantees minimum wear and tear
- long life span of the engine and aggregates
- reduces friction and prevents from wear and tear
- increases the operational reliability at high temperatures
- protects against oil dilution caused by fuel especially in case of frequent short distance travels

REACTION TIME
works during operation

APPLICATION FIELD
for use in all diesel and gasoline engines

CONSUMPTION
product sufficient for 5L

APPLICATION INTERVAL
with every oil change



AUTOMAX

RESTORE YOUR PERFORMANCE

for maximum power in driving

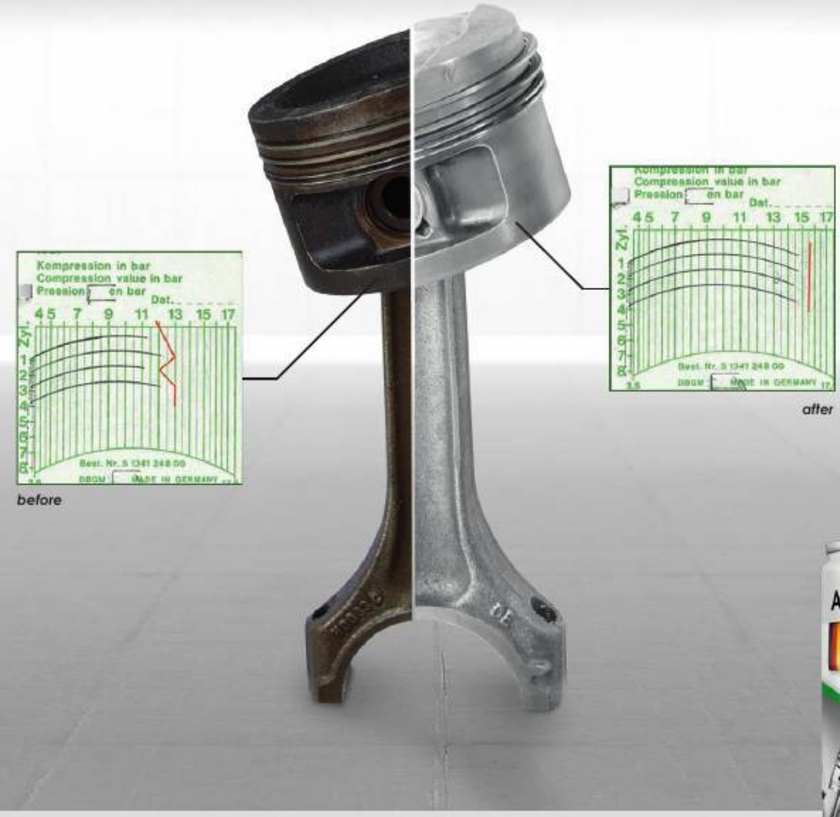

MAX UP YOUR CAR

HIGH PERFORMANCE ADDITIVES



www.automax-germany.de



FUEL SYSTEM

FUEL CLEAN 250ml – Art. No. 62758



- effective cleaning of the entire fuel system from the tank to the combustion chamber
- displaces moisture, removes operationally caused contamination and prevents formation of new deposits
- optimizes the fuel consumption and exhaust gas emission values
- protects from corrosion and increases the operational reliability

REACTION TIME
works during operation

APPLICATION FIELD
for use in all gasoline engines

CONSUMPTION
product sufficient for 60L

APPLICATION INTERVAL
on demand



FUEL SYSTEM CLEANER+ 250ml – Art. No. 62752



- removes operationally caused contamination in the entire fuel system from the tank to the combustion chamber
- binds moisture and condensed water
- dissolves resins and gums in the carburetor and injection system and removes coking and unburned carbon residues in the upper cylinder area
- optimized fuel consumption
- improved engine performance and reduced exhaust emissions
- considerably prolongs the life span of the fuel system and catalytic converter

Zertifiziert durch TÜV THÜRINGEN – Wirksamkeit geprüft / effectiveness tested – DIN EN ISO 12937 – wasserbindende Wirkung / water binding effect

REACTION TIME
works during operation

APPLICATION FIELD
for use in all gasoline engines

CONSUMPTION
product sufficient for 40-60L

APPLICATION INTERVAL
with every tank filling





PROFESSIONAL CLEANING OF THE ENTIRE FUEL SYSTEM

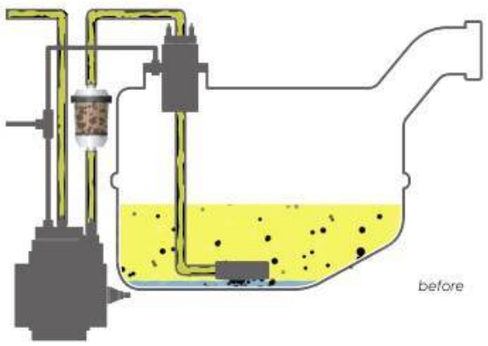

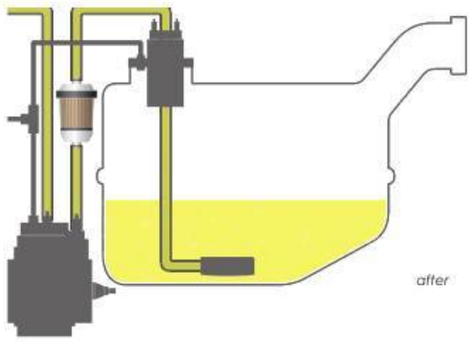

FUEL SYSTEM CLEANER HYBRID 200ml – Art. No. 09141



- high Performance Additive especially for hybrid vehicles
- cleans the entire fuel system
- protects from corrosion
- increased lubricity reduces wear and tear
- optimizes fuel consumption as well as emission values
- ensures operational reliability especially at frequent load changes
- reduction of cold start problems
- better performances of hybrid engines

REACTION TIME
works during operation

APPLICATION FIELD
for use in all gasoline engines

CONSUMPTION
product sufficient for 40-60L

APPLICATION INTERVAL
with every tank filling



FUEL AIR INTAKE CLEANER 250ml – Art. No. 62761



- for the cleaning of the entire air intake system of fuel engines
- removes deposits in the air intake system, combustion chamber, throttle valves, inlet and outlet valves and valve seats
- especially recommended for insufficient throttle response and compression as well as engine knocking and dieseling
- optimizes fuel consumption and exhaust gas emission values
- ensures smooth idling

technical devices: **best results with AUTOMAX Stream Machine**



AUTOMAX STREAM MACHINE Art. No. 62929
- Cleaning the fuel system
- Cleaning the air intake



REACTION TIME
works during application

APPLICATION FIELD
for use in all air intake systems of gasoline engines

CONSUMPTION
product sufficient for 1 application

APPLICATION INTERVAL
on demand

GDI INJECTOR CLEANER 250ml – Art. No. 09142



- effective cleaning of injection valves and injection nozzles of GDI engines
- removes operational contamination in the entire gasoline injection system and prevents new deposits
- ensures an ideal combustion process
- optimizes fuel consumption and thus the exhaust gas emission values, particularly in modern GDI engines
- for longer engine life and smoother engine running
- improves the engine performance



REACTION TIME
works during operation

APPLICATION FIELD
for use in all gasoline engines

CONSUMPTION
product sufficient for 50-70L

APPLICATION INTERVAL
with every tank filling or on demand



VALVE & INJECTOR CLEANER 250ml – Art. No. 62759



- effective cleaning of valves, injector nozzles and the inlet area without dismantling
- removes operationally caused contamination in the entire fuel injection system
- improves the engine performance
- provides a powerful and stable combustion process
- optimizes the fuel consumption and exhaust gas emission values
- considerably prolongs the life span of the engine
- ensures smooth engine running



REACTION TIME
works during operation

APPLICATION FIELD
for use in all gasoline engines

CONSUMPTION
product sufficient for 60L

APPLICATION INTERVAL
with every tank filling or on demand



PETROL APPLICATOR SPRAY 400ml – Art. No. 62749



- for cleaning and protection of the entire air intake system of fuel engines
- removes contamination and resin deposits in the air intake system, combustion chamber, venturi tube throttle valves, inlet and outlet valves and valve seats
- without dismantling of any system parts
- optimizes fuel consumption and the exhaust gas emission values
- ensures smooth idling and powerful and even motor running



REACTION TIME
approx. 10 min.

APPLICATION FIELD
for use in all gasoline engines

CONSUMPTION
depending on application

APPLICATION INTERVAL
on demand

OCTANE BOOSTER 250ml – Art. No. 62760



- to increase the octane number of low octane fuels or for use in engines with higher octane requirements up to 3 points
- protects valve seats when running on unleaded fuel
- improves start and full-load performance
- provides smoother idling
- ensures stable combustion process and an improved CO-value
- improves engine performance and operational reliability



REACTION TIME
works during operation

APPLICATION FIELD
for use in all gasoline engines

CONSUMPTION
product sufficient for 60L

APPLICATION INTERVAL
with every tank filling

OCTANE BOOSTER MAX 250ml – Art. No. 62718



- to increase the octane number of low octane fuels or for use in engines with higher octane requirements up to 3-8 points
- protects valve seats when running on unleaded fuel
- improves start and full-load performance
- provides smoother idling
- ensures stable combustion process and an improved CO-value



REACTION TIME
works during operation

APPLICATION FIELD
for use in all gasoline engines

CONSUMPTION
product sufficient for 45L

APPLICATION INTERVAL
with every tank filling



DIESEL SYSTEM

DIESEL SYSTEM CLEANER+ 250ml – Art. No. 62753



- reliably removes operationally caused contamination in the whole diesel system from the tank to the combustion chamber
- absorbs and efficiently removes moisture from the diesel system
- ensures effective protection of the high pressure pump
- provides an optimal fuel atomization
- protects against corrosion
- increased compression
- improved engine performance
- optimized fuel consumption and less exhaust emissions
- especially recommended for extended service intervals

Zertifiziert durch TÜV THÜRINGEN – Wirksamkeit geprüft effectiveness tested – DIN EN ISO 12937 – wasserbindende Wirkung water binding effect





REACTION TIME
works during operation

APPLICATION FIELD
for use in all diesel engines

CONSUMPTION
product sufficient for 60-80L

APPLICATION INTERVAL
with every tank filling

DIESEL CLEAN 250ml – Art. No. 62762



- improved engine performance and diesel consumption
- increased operational reliability
- deposits and residues of carbon oil and soot are properly dissolved and dispersed
- ensures lasting lubrication especially for low-sulphur diesel fuels
- reliably removes operationally caused contamination in the whole fuel system from the tank to the combustion chamber
- avoids formation of deposits in the injection system



REACTION TIME
works during operation

APPLICATION FIELD
for use in all diesel engines

CONSUMPTION
product sufficient for 60L

APPLICATION INTERVAL
with every tank filling

DIESEL AIR INTAKE CLEANER 250ml – Art. No. 62766



- cleaning and protection of the entire air intake system
- removes deposits in the air intake system, combustion chamber, throttle valves, inlet and outlet valves and valve seats
- optimizes the fuel consumption and the exhaust gas emission values
- ensures smooth, powerful and even motor running

technical devices: **best results with AUTOMAX Stream Machine**



AUTOMAX STREAM MACHINE Art. No.: 62929
- Cleaning the fuel system
- Cleaning the air intake



REACTION TIME
works during application

APPLICATION FIELD
for use in all air intake systems of diesel engines

CONSUMPTION
product sufficient for 1 application

APPLICATION INTERVAL
on demand

DIESEL ANTI SMOKE 150ml – Art. No. 62943



- eliminates disturbing noises in diesel engines and reduces carbon formation
- ensures clean combustion
- provides optimum lubrication of all moving parts in the diesel system
- protects reliably against corrosion
- reduced formation of soot



REACTION TIME
works during operation

APPLICATION FIELD
for use in all diesel engines

CONSUMPTION
product sufficient for 80L

APPLICATION INTERVAL
on demand

DIESEL WINTER CARE 150ml – Art. No. 62764



- ensures improved flow properties of all diesel fuels
- winter safe down to -28°C
- reliably prevents from formation of paraffin crystals at low temperatures
- ensures optimal operation of all system components and safe driving conditions
- improves the filterability of the diesel fuel
- prevents blocking of the diesel filter
- ensures improved cold start properties in the winter period



REACTION TIME
works during operation

APPLICATION FIELD
for use in all diesel engines

CONSUMPTION
product sufficient for 150L

APPLICATION INTERVAL
with every tank filling

CETANE BOOSTER 150ml – Art. No. 62737



- for improved combustibility of the fuel
- increases the cetane number of the diesel fuel by up to 5 points
- especially recommended for lower quality fuels
- for powerful and clean combustion and improved engine performance
- less exhaust gas and soot emissions
- improved cold starting properties and smoother engine running
- optimizes fuel consumption



REACTION TIME
works during operation

APPLICATION FIELD
for use in all diesel engines

CONSUMPTION
product sufficient for 60L

APPLICATION INTERVAL
with every tank filling

DIESEL ANTI BACTERIA 150ml – Art. No. 62763



- high-performance concentrate with a wide action spectrum
- for preventive use against bacteria, fungi and yeasts
- supports optimal operation of all system components
- for clean and powerful combustion and efficient engine performance
- preventively disinfects the complete diesel system
- existing germs are quickly eliminated
- regular use helps to prevent new bacterial growth



REACTION TIME
works during operation

APPLICATION FIELD
for use in all diesel engines

CONSUMPTION
product sufficient for 150L

APPLICATION INTERVAL
on demand

DIESEL APPLICATOR SPRAY 400ml – Art. No. 62748



- cleaning and protection of the entire air intake system
- removes deposits in the air intake system, combustion chamber, throttle valves, inlet and outlet valves and valve seats
- suitable for use in engines with a diesel particle filter
- free of chlorine, phosphorus, lead and cadmium
- optimizes the fuel consumption and the exhaust gas emission values
- ensures smooth, powerful and even motor running



REACTION TIME
approx. 10 min.

APPLICATION FIELD
for use in all diesel engines

CONSUMPTION
depending on application

APPLICATION INTERVAL
on demand

DPF CLEANER 250ml – Art. No. 62765



- high-performance additive to reduce soot formation
- reduction of exhaust gas emissions
- increased engine performance
- compatible with all diesel engines
- for optimal operation of all system components and efficient engine performance
- supports the regeneration of the diesel particulate filter
- increased cold start properties



REACTION TIME
works during operation

APPLICATION FIELD
for use in all kind of diesel engines with down-stream diesel particular filter

CONSUMPTION
product sufficient for 40-60L

APPLICATION INTERVAL
on demand

DPF & CATALYST CLEANING FOAM 400ml – Art. No. 62918



- effective cleaner for fast and efficient cleaning of the diesel particulate filter and catalyst of passenger cars without dismantling
- impurities in the diesel particulate filter are dissolved quickly especially vehicles driving short distances are often concerned by clogged particulate filters (city driving)
- preventive use of the product with each service can help to avoid future problems with the particulate filter and will therefore significantly reduce operating cost
- dissolves soot in diesel paticulate filter, catalyst and EGR-valves
- reduces operating costs and ensures optimum engine performance and lower fuel consumption



REACTION TIME
works during application

APPLICATION FIELD
for use in all diesel particular filter

CONSUMPTION
product sufficient for 1 application

APPLICATION INTERVAL
on demand

DPF CLEANER LIQUID 1000ml – Art. No. 62772



- highly efficient cleaning combination
- for cleaning of dismantled diesel particulate filters
- dissolves contamination in the diesel particulate filter and regenerates its full functionality
- for clean combustion and efficient engine performance
- minimizes exhaust emissions
- clear cost benefit compared to installation of a new diesel particulate filter
- Dosage: 1: 3 (1L DPF Cleaning Liquid sufficient for 4L of rinsing liquid), for heavy soiling ratio: 1:1



REACTION TIME
8 to 10 hours exposure time

APPLICATION FIELD
for use in all diesel particular filter

CONSUMPTION
product sufficient for 4L

APPLICATION INTERVAL
on demand

DPF AIR JET FLUID 1000ml – Art. No. 62945



- for use with compressed-air pistol
- no removal of the diesel particle filter necessary
- dissolves contamination in the DPF and regenerates its functionality
- highly efficient cleaning fluid
- dissolves all operationally caused residues and contamination
- readily biodegradable
- provides a clear cost benefit compared to installation of a new diesel particulate filter
- Dosage: 1: 3 (1L DPF Cleaning Liquid sufficient for 4L of rinsing liquid), for heavy soiling ratio: 1:1

technical device: best results with AUTOMAX DPF Air Jet Compressed-Air Pistol



DPF AIR JET COMPRESSED-AIR PISTOL Art. No. 09143

- no need to dismantle the diesel particulate filter
- easy to use
- quick and effective application without long exposure time
- gentle cleaning process
- incl. detailed instruction manual



REACTION TIME
works during application

APPLICATION FIELD
for use in all diesel particular filter

CONSUMPTION
product sufficient for 1 application

APPLICATION INTERVAL
on demand

AUTOMAX DPF STARTER KIT Art. No. 09144



CONTENT

1 x DPF Air Jet Compressed-Air Pistol
2 x DPF Air Jet Fluid
2 x DPF Cleaner



CAT CLEAN – Catalytic Converter & Oxygen Sensor Cleaner 250ml – Art. No. 62776



- new decarbonizing technology
- specially developed to exceed the latest environmental standards
- dissolves resin, gum and carbon deposits in the entire fuel system oxygen sensor/lambda probe and catalytic converter
- regular use helps to prevent heavy contamination
- increases fuel efficiency
- optimized engine performance
- ensures the proper function of the catalytic converter/oxygen sensor

advice: **application for fuel and diesel systems**



REACTION TIME
works during operation

APPLICATION FIELD
for use in all diesel and gasoline engines

CONSUMPTION
product sufficient for 60-80L

APPLICATION INTERVAL
with every tank filling

AUTOMAX

RESTORE YOUR PERFORMANCE

for more engine power & better emission standards

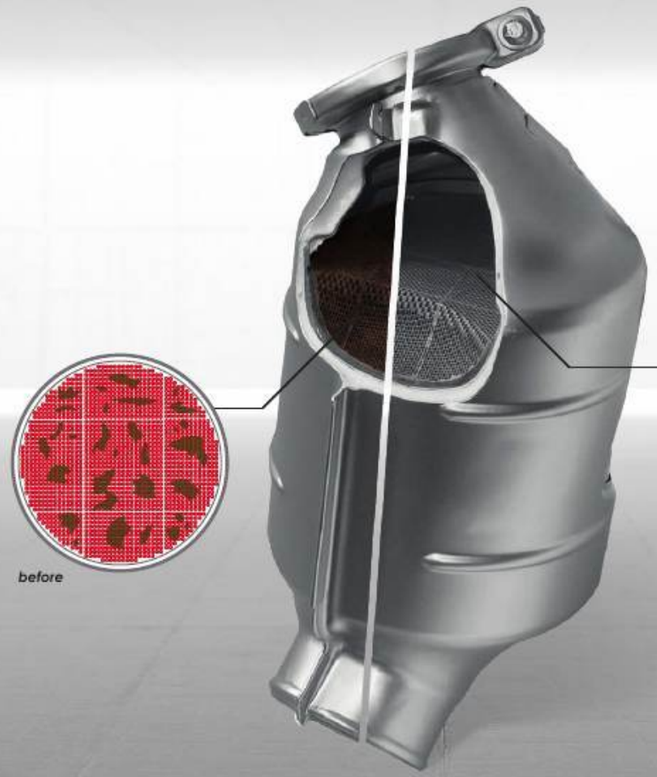

MAX UP YOUR CAR

HIGH PERFORMANCE ADDITIVES





LPG SYSTEM

LPG FUEL SYSTEM CLEANER 250ml – Art. No. 62750



- high-performance product for liquefied petroleum gas (LPG) powered engines
- removes all operationally caused contamination in the entire combustion system
- highly effective lubricating components
- protects valves against wear, tear and corrosion
- optimizes the fuel consumption and exhaust gas emission values
- improves the operational liability
- increases the life span of the engine
- protects against valve impact

REACTION TIME
works during operation

APPLICATION FIELD
for use in all liquefied petroleum gas (LPG) powered engines

CONSUMPTION
product sufficient for 60L

APPLICATION INTERVAL
on demand



LPG SYSTEM CLEAN & CARE 120ml – Art. No. 62751



- high-performance product
- protects the complete gas system against corrosion
- ensures optimal protection against valve impact
- absorbs harmful moisture
- effectively prevents the formation of combustion residues
- long-term protection of valves and vale seats
- optimized fuel consumption and reduced exhaust gas emission
- extends the life span of the engine

REACTION TIME
works during operation

APPLICATION FIELD
for use in all liquefied petroleum gas (LPG) powered engines

CONSUMPTION
product sufficient for 50L

APPLICATION INTERVAL
on demand



LPG VALVE GUARD 1000ml – Art. No. 62754



- highly efficient fuel additive
- considerably reduces wear and tear of valves and valve seats
- reliably and lastingly removes even smallest particles of contamination in the entire combustion system
- long-term protection
- permanent lubrication of valves
- optimized fuel consumption and reduced exhaust gas emission
- protects against valve impact
- extends the life span of the engine

REACTION TIME
works during operation

APPLICATION FIELD
for use in all liquefied gas (LPG) powered engines

CONSUMPTION
product sufficient for 1000L

APPLICATION INTERVAL
with every tank filling





Liquified petroleum gas (LPG) is the oldest and most widely used alternative fuel. Significantly lower fuel costs and a comparatively inexpensive and simple conversion speak in favour of LPG. The emissions of climate-damaging exhaust gases from LPG-powered vehicles are significantly lower than those from petrol vehicles. This applies both to the greenhouse gas CO2 and various other harmful exhaust gases such as nitrogen oxides and unburnt hydrogen and particulate matter.



COOLING SYSTEM

RADIATOR LEAK STOP 250ml – Art. No. 62767



- reliably seals critical hairline cracks and small leaks
- also for preventive usage
- for the operational liability of engines
- avoids expensive repair works
- prevents from loss of cooling liquid
- protects against engine damage
- provides protection against corrosion

REACTION TIME
works during operation

APPLICATION FIELD
for use in all water cooled, closed cooling systems

CONSUMPTION
product sufficient for 12L

APPLICATION INTERVAL
on demand



RADIATOR FLUSH 250ml – Art. No. 62768



- contains quick-reacting components for removal of operationally caused contamination in the entire cooling circuit
- dissolves and removes scale
- improves the performance of valves, thermostats and water pumps
- for the operational liability of engines
- improved heating and cooling performance
- extends the life span of all aggregates

REACTION TIME
approx. 30 min.

APPLICATION FIELD
for use in all water cooled, closed cooling systems

CONSUMPTION
product sufficient for 10L

APPLICATION INTERVAL
before every change of coolant



RADIATOR CLEANER 250ml – Art. No. 62927



- for all cooling systems
- removes all operational deposits in the entire cooling system as well as lime and scale deposits
- dissolves dangerous radiator sludge
- cleans water coolers, boilers and heat exchangers
- makes valves, thermostats and water pumps free again

REACTION TIME
approx. 15 – 45 min.

APPLICATION FIELD
for use in all water cooled, closed cooling systems

CONSUMPTION
product sufficient for 10L

APPLICATION INTERVAL
before every change of the coolant

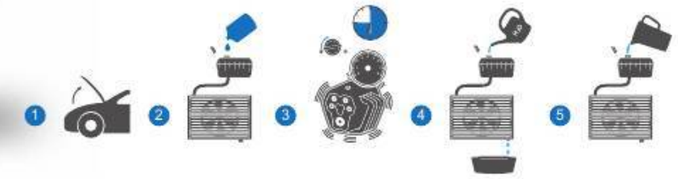

RADIATOR CONDITIONER 250ml – Art. No. 62920



- protects against rust, corrosion, electrolysis and cavitation
- lubricates all parts of the cooling system
- ensures an optimized heat exchange
- prevents from loss of cooling liquids
- protects against engine damage
- helps to avoid expensive repair work

REACTION TIME
works during operation

APPLICATION FIELD
for use in all water cooled, closed cooling systems

CONSUMPTION
product sufficient for 10L

APPLICATION INTERVAL
on demand



RADIATOR OIL CLEANER SET C1+C2 2 x 175ml – Art. No. 62746



- for all cooling systems
- removes oily deposits caused by defect cylinder head gaskets or leaking radiators
- effectively cleans the entire cooling system
- other operationally caused contamination, e.g. scale, coolant sludge, lime will be dissolved and removed as well
- valves, thermostats and water pumps return to their optimal performance
- improved heating and cooling performance
- increases the operational liability of the cooling system
- extends the life span of all aggregates

REACTION TIME
approx. 15 min.

APPLICATION FIELD
for use in all water cooled, closed cooling systems

CONSUMPTION
2 x 175 ml for up to 10 L

APPLICATION INTERVAL
on demand





AIR CONDITION

AIRCON CLEANER 400ml – Art. No. 62769



- for professional and efficient cleaning and disinfection of air-conditioning systems
- kills microorganisms such as bacterias and fungi quickly
- provides clean and fresh air
- simple application
- gives a pleasant and fresh odour in the vehicle interior
- no need for dismantling of the air-conditioning system

REACTION TIME
approx. 15 min.

APPLICATION FIELD
for use in all air-conditioning systems

CONSUMPTION
product sufficient for 1-2 applications

APPLICATION INTERVAL
on demand



FRESH´N AIR FLUID 250ml – Art. No. 62774



- freshens the air of the complete vehicle interior
- eliminates malodors
- provides long-lasting fresh and healthy car cabin climate
- disinfects the vehicle interior
- application in all commercially available nebulizer devices



technical devices:
best results with AUTOMAX Fresh´n AIR machine PRO

REACTION TIME
duration of use depends on the performance of the used nebulizer

APPLICATION FIELD
for air freshening throughout the vehicle interior

CONSUMPTION
product sufficient for 1 application

APPLICATION INTERVAL
on demand



AIRCON REFRESHER LEMON 150ml – Art. No. 62699



- for professional and effective cleaning
- ensures a healthy room climate
- simple use
- for hygienic operation of the air conditioning system
- neutralized, unpleasant smells caused by microorganisms
- gives the vehicle interior a pleasant smell

REACTION TIME
approx. 15 min.

APPLICATION FIELD
for air refreshing throughout the vehicle interior

CONSUMPTION
product sufficient for one car

APPLICATION INTERVAL
on demand







FRESH´N AIR MACHINE PRO

Art. No. 09146

- electronic ultrasonic device for atomizing
- liquid is distributed over the circulation system of the A/C-sytem
- droplets do not stick to the surface and with that are completely spread in the entire A/C and the ventilation system of the vehicle
- incl. detailed instruction manual



CAR CARE

AUTOMAX
automax-germany.de

WINDSCREEN ANTIFREEZE -30C & -60°C

-30°C | 1000ml – Art. No. 09147
-60°C | 1000ml – Art. No. 09148



- for use in all windshield washer systems
- effectively removes winter contamination on the windshield
- ensures streak-free visibility
- prevents freezing of the washing system and nozzles (also fan nozzles)

REACTION TIME
works during application

APPLICATION FIELD
for all kind of windscreens

CONSUMPTION
depending on application

APPLICATION INTERVAL
on demand



ANTI HOLOGRAM POLISH

500ml – Art. No. 62908



- high-gloss polish with carnauba wax agents
- remove polishing defects (hologram effects), micro-scratches, swirls marks and streaks in the paintwork
- provides long-lasting deep shine and surface protection
- especially for dark varnish
- easy application
- free of solvents

REACTION TIME
works during application

APPLICATION FIELD
for all kind of paints

CONSUMPTION
depending on application

APPLICATION INTERVAL
on demand



EASY GUARD SEALANT

500ml – Art. No. 62908



- wax for applying or spraying
- removes dust and slight soiling of all kind in a simple manner
- protects the treated surfaces permanently thanks to balanced mixture of carnauba wax
- free of solvents and abrasives
- fast sealing effect
- easy application

REACTION TIME
works during application

APPLICATION FIELD
for all kind of paints

CONSUMPTION
depending on application

APPLICATION INTERVAL
on demand





HIGH GLOSS SEALANT

500ml – Art. No. 62922



- high-gloss paintwork sealant with a further developed wax component mixture
- contains a many high-resistant carnauba wax particles
- seals surfaces and protects them from any weather effects
- easy application
- free of solvents and abrasives
- long-lasting high-gloss

REACTION TIME
works during application

APPLICATION FIELD
for all kind of paints

CONSUMPTION
depending on application

APPLICATION INTERVAL
on demand





TOP COAT SEALANT

500ml – Art. No. 62909



- long-term high-gloss paintwork sealant
- based on high-strength carnauba wax
- perfectly protects and seals prepared paintwork surfaces against different weather effects
- high scratch resistance
- free of solvents/abrasives
- long-time high-gloss finish

REACTION TIME
works during application

APPLICATION FIELD
for all kind of paints

CONSUMPTION
depending on application

APPLICATION INTERVAL
on demand







NANO SEALING

NANO CAR GLASS SEALANT SET Art. No. 62795

- easy application for best results
- with long-term protection against dirt and insects
- water-repellent with lotus effect
- increased safety through optimized visibility at night and during the rain

content:
- 75 ml cleaning milk
- 2 x 15 ml sealant components
- 2 polishing clothes

REACTION TIME
according application sheet

APPLICATION FIELD
for all glass surfaces

CONSUMPTION
product sufficient for one car

APPLICATION INTERVAL
on demand



NANO CAR GLASS SEALANT WITH LOTUS EFFECT





GEAR BOX & POWER STEERING

AUTOMATIC TRANSMISSION CLEAN 250ml – Art. No. 62771



- high performance cleaner for automatic gear boxes
- removes operationally caused contamination and deposits
- protects from corrosion and early wear
- ensures soft shifting with direct response
- for smooth engine running



technical device:
For best results we recommend application with the "Automatic Transmission Cleaning Device"



REACTION TIME
approx. 15 min.

APPLICATION FIELD
for use in all automatic transmission with torque converter

CONSUMPTION
product sufficient for 8L

APPLICATION INTERVAL
before every change of transmission oil

AUTOMATIC TRANSMISSION CARE & PROTECT 250ml – Art. No. 62789



- maintains the performance of transmission gear systems
- ensures soft shifting
- for direct response and prompt acceleration
- supports the cleaning effect of the transmission fluid
- protects from corrosion and early wear
- ensures smooth engine running



technical device:
For best results we recommend application with the "Automatic Transmission Cleaning Device"



REACTION TIME
works during operation

APPLICATION FIELD
for all automatic transmission with torque converter

CONSUMPTION
product sufficient for 8L

APPLICATION INTERVAL
on demand

POWER STEERING CARE & PROTECT 100ml – Art. No. 62747



- protects all parts of the power steering system from wear, tear and rust
- protects from oxidation and foam formation
- noise-reducing effect
- guarantees safe and smooth operation



REACTION TIME
works during operation

APPLICATION FIELD
for use in all automatic transmission with torque converter

CONSUMPTION
product sufficient for 2L

APPLICATION INTERVAL
on demand



ATF CLEANING

- ✓ **Cleaning and maintenance of the entire transmission system: easily and quickly with just one device**
- ✓ Oil exchange and level adjustment
- ✓ Print out the procedure and the vehicle data
- ✓ Monitoring of oil temperature
- ✓ Monitoring of oil pressure
- ✓ Empty fluid tank without disassembling



SERVICE PRODUCTS

BRAKE CLEANER 500ml – Art. No. 62785



- acetone-free
- based on a special type of white spirits
- for quick and easy cleaning of drum and wheel disc brakes, clutch parts, brake linings and blocks
- removes oil, dirt and greasy deposits
- for cleaning of heavily contaminated machine parts
- evaporates residue-free

REACTION TIME
works during application

APPLICATION FIELD
for quick cleaning of drum and disc brakes, brake pads and clutch parts

CONSUMPTION
depending on application

APPLICATION INTERVAL
on demand

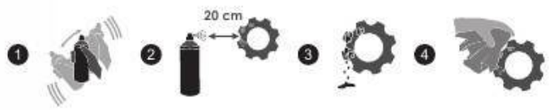

THROTTLE BODY CLEANER 500ml – Art. No. 62784



- special composition of cleaning agents
- also suitable for external and internal cleaning of carburetors
- for repair, assembly and routine maintenance works
- quick removal of operationally caused deposits (fuel, oil, grease) in the inlet area, at the throttle body and idling control valves without dismantling
- regular cleaning improves the engine starting properties and reduces the fuel consumption

REACTION TIME
works during application

APPLICATION FIELD
for cleaning of throttle, throttle body, idling control valves and for external and internal cleaning of carburettors

CONSUMPTION
depending on the application

APPLICATION INTERVAL
on demand



RUST REMOVER MOS_2 500ml – Art. No. 62788



- contains selected raw materials for fast and effective results at corroded metal compounds
- high capillary effect and good creeping properties ensure that even the smallest cracks can be reached
- anti-corrosion additives provide long-term protection of the metal parts
- perfectly suitable as lubricant
- disassembly aid for rusted metal compounds
- loosens corroded connections such as nuts and bolts
- infiltrates and penetrates rust
- permanent lubrication of screw connections, guides and all types of sliding surfaces

REACTION TIME
approx. 5 min.

APPLICATION FIELD
for all types of maintenance work

CONSUMPTION
depending on application

APPLICATION INTERVAL
on demand



NANO LUBE 500ml – Art. No. 62742



- lubricates and protects metal surfaces to reduce friction and wear effectively
- penetrates and releases rusted parts and sticky mechanisms
- displaces moisture and prevents corrosion
- extremely effective to drive out and protect against moisture on electricity plugs in all types of vehicles as cars, boats, bikes etc.
- unbeatable as lubrication for chains, ropes, rolls, bearings, chain inner bearings, gearwheels, worm gears, joints, clutches, wire ropes, hinges, o-rings, bowden cables, locks etc
- can be used on anything where metal components constantly exposed to friction
- very effective for pneumatic tools

REACTION TIME
works during application

APPLICATION FIELD
to use all types of lubrication

CONSUMPTION
depending on application

APPLICATION INTERVAL
on demand



PENETRATE SPRAY 400ml – Art. No. 62934



- through high-intensity components a quick effect is achieved particularly for corroded metal compounds
- even the smallest cracks and gaps are reached due to a high capillary effect and excellent creeping properties
- lubricates and prevents from renewed rusting by corrosion-repellent components
- excellent removal support for rusted metal compounds
- protects against corrosion and oxidation, thereby preventing seizure of threaded connections
- facilitates part assembly and subsequent dismantling
- treats squeaking and creaking sounds

REACTION TIME
approx. 5 min.

APPLICATION FIELD
for use of all kinds of rusted metal compounds

CONSUMPTION
depending on application

APPLICATION INTERVAL
on demand



CHAIN LUBE EXTREME 400ml – Art. No. 62741



- application field in industry and vehicle technology
- highly sticky special lubricant for extreme applications
- ideal for use on motorcycle chains on and off road, wire ropes and pulleys
- with synthetic additives and special substances it protects against wear, oxidation and corrosion
- provides good penetration and forms a well-adherent and durable protective layer on exposed surfaces with a „wash-off" effect in all weather conditions
- protects against corrosion and wear
- prevents jerky start-up
- prevents noise
- no embrittlement

REACTION TIME
approx. 3 min.

APPLICATION FIELD
for use in all kind of industry and automotive engineering

CONSUMPTION
depending on application

APPLICATION INTERVAL
on demand



ELECTRICAL CONTACT CLEANER 400ml – Art. No. 62740



- specially developed product for cleaning of electrical terminals, switching and plug contacts and other electrical connections
- takes care of thorough cleaning of terminals
- controls oxidation at the various contact points
- improved contactness
- reduction of reoxidation and pollution
- reduces the voltage drop and removes oil and grease permanently
- remove heavy dirt from the parts to be treated
- strongly oxidized contacts should be cleaned mechanically

REACTION TIME
approx. 3 min.

APPLICATION FIELD
for use in all kind of electrical terminals, switching and plug contacts and other electrical connections

CONSUMPTION
depending on application

APPLICATION INTERVAL
on demand



SILICONE SPRAY 400ml – Art. No. 09149



- especially developed product, oil and fat free
- protective, lubricating, parting and care agent for plastic, wood, rubber as well as metal parts
- spot free and invisible lubrication
- offers excellent heat resistance
- very good adhesion properties
- water-repellent
- anti-static
- protects against oxidation and corrosion

REACTION TIME
works during application

APPLICATION FIELD
for use of all electrical contacts, rubbers, plastic surfaces and synthetic materials

CONSUMPTION
depending on application

APPLICATION INTERVAL
on demand

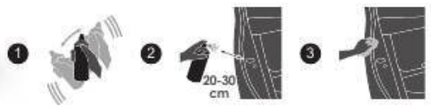

STARTING SPRAY 400ml – Art. No. 09150



- start aid for all petrol and diesel engines
- facilitates the discharge of gasoline and diesel engines
- thus protecting the starter, engine and battery
- quick and easy use
- low ignition temperatures
- high ignition energy

REACTION TIME
works during application

APPLICATION FIELD
for all kind of engines

CONSUMPTION
depending on application

APPLICATION INTERVAL
on demand



INJECTOR DISMANTLING AID 400ml – Art. No. 09151



- fast and effective release of stuck components as injectors, spark plugs and glow plugs
- simple and gentle disassembly of parts
- special lubricants prevents prevent „ripping off"

REACTION TIME
works during application

APPLICATION FIELD
for all kind of engines

CONSUMPTION
depending on application

APPLICATION INTERVAL
on demand



AIRFLOW SENSOR CLEANER 200ml – Art. No. 09152



- fast and effective cleaning of sensitive air mass meter components
- eliminates contaminations on the hot wire
- prevents detection of incorrect measured values for the calculation of the air-fuel mixture
- prevents expensive replacement of the sensor in most cases
- improves start and idle behaviour
- maintains engine performance
- optimizes fuel economy
- evaporates without residues
- easy and quick application
- for gasoline as well as diesel engines

REACTION TIME
works during application

APPLICATION FIELD
for all kind of engines

CONSUMPTION
depending on application

APPLICATION INTERVAL
on demand



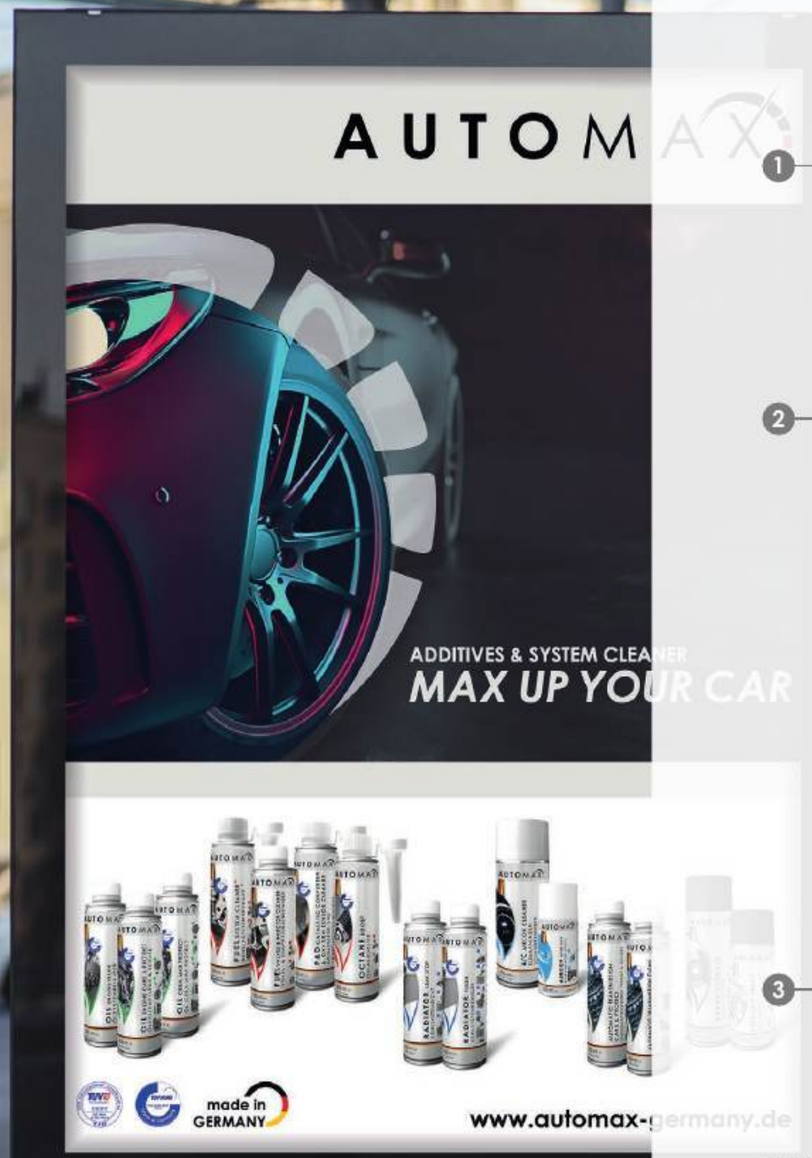

ADVERTISING MATERIALS

Banner • Displays • Promotional items

1


2


3


4


5


6


7


ADVERTISING MATERIALS – SELECTION

	Product	Art. No.
1	Disinfectant-Gel	WM0112
2	Mousepads	WM0064
3	3-monthly calender	WM0087
4	Test Tube display	WM0079
	For more information request our Advertising Catalog	

	Product	Art. No.
5	Lanyard	WM0065
6	Bottle stand	WM0091
7	Product display	WM0083
	For more information request our Advertising Catalog	

We offer to every target group an extensive marketing support for each sales step:

- Multilingual labels and advertising materials
- Merchandising/POS
- Customized printing materials
- Social media marketing
- Application movies



PACKING LIST

PLASTIC BOTTLES

Content	bottles per carton	cartons per Euro pallets 120 x 80 cm	cartons per CP2 pallets 120 x 80 cm	cartons per CP5 pallets 114 x 75 cm	cartons per CP3 pallets 114 x 114 cm	pallets per 20ft container	pallets per 40ft container
250ml	24 bottles	80 cartons	80 cartons	80 cartons	128 cartons	15xCP5 pallets 10xCP3 pallets	30xCP5 pallets 20xCP3 pallets
250ml	12 bottles	80 cartons	80 cartons	80 cartons	128 cartons		
500ml	12 bottles	84 cartons	84 cartons	84 cartons	-		
1000ml	12 bottles	50 cartons	50 cartons	50 cartons	60 cartons		

other packing options on request

AEROSOL

Content	cans per carton	cartons per Euro pallets 120 x 80 cm	cartons per CP2 pallets 120 x 80 cm	cartons per CP5 pallets 114 x 75 cm	cartons per CP3 pallets 114 x 114 cm	pallets per 20ft container	pallets per 40ft container
120ml	24 cans	54 cartons	54 cartons	54 cartons	96 cartons	15xCP5 pallets 10xCP3 pallets	30xCP5 pallets 20xCP3 pallets
150ml	12 cans	168 cartons	168 cartons	168 cartons	234 cartons		
200ml	12 cans	84 cartons	84 cartons	84 cartons	168 cartons		
400ml	12 cans	84 cartons	84 cartons	84 cartons	168 cartons		
400ml	24 cans*	36 cartons	36 cartons	36 cartons	80 cartons		
500ml	12 cans	84 cartons	84 cartons	84 cartons	168 cartons		

other packing options on request

*exception - Petrol Applicator Spray 400ml

METAL CANS

Content	cans per carton	cartons per Euro pallets 120 x 80 cm	cartons per CP2 pallets 120 x 80 cm	cartons per CP5 pallets 114 x 75 cm	cartons per CP3 pallets 114 x 114 cm	pallets per 20ft container	pallets per 40ft container
100ml	24 cans	120 cartons	120 cartons	120 cartons	192 cartons	15xCP5 pallets 10xCP3 pallets	30xCP5 pallets 20xCP3 pallets
150ml	24 cans	120 cartons	120 cartons	120 cartons	192 cartons		
200ml	24 cans	90 cartons	90 cartons	90 cartons	144 cartons		
250ml	24 cans	80 cartons	80 cartons	80 cartons	128 cartons		
1000ml	12 cans	50 cartons	50 cartons	50 cartons	60 cartons		

other packing options on request

CP5 114 x 75 cm

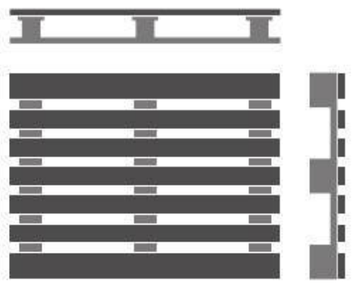

CP3 114 x 114 cm

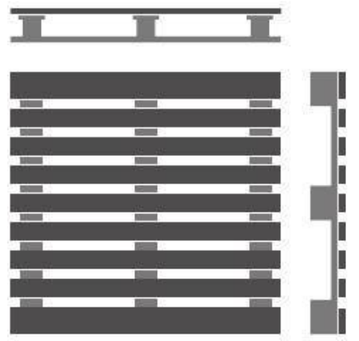

made in GERMANY

AUTOMAX

MAX UP YOUR CAR

HIGH PERFORMANCE ADDITIVES

AUTOMAX

Product of

GAT Gesellschaft für Kraftstoff- und
Automobiltechnologie mbH & Co. KG
Alt Saale 2 I D-07407 Uhlstädt-Kirchhasel

+49 (0) 3672 48380-66
+49 (0) 3672 48380-22

info@automax-germany.de
www.automax-germany.de

www.facebook.com/gat.germany

This project is co-financed by the European Union (EFRE) and the Free State of Thuringia (Thuringian Ministry for Economy, Labour and Technology).

EFRE
Freistaat Thüringen
Thuringian Ministry for Economy, Labour and Technology